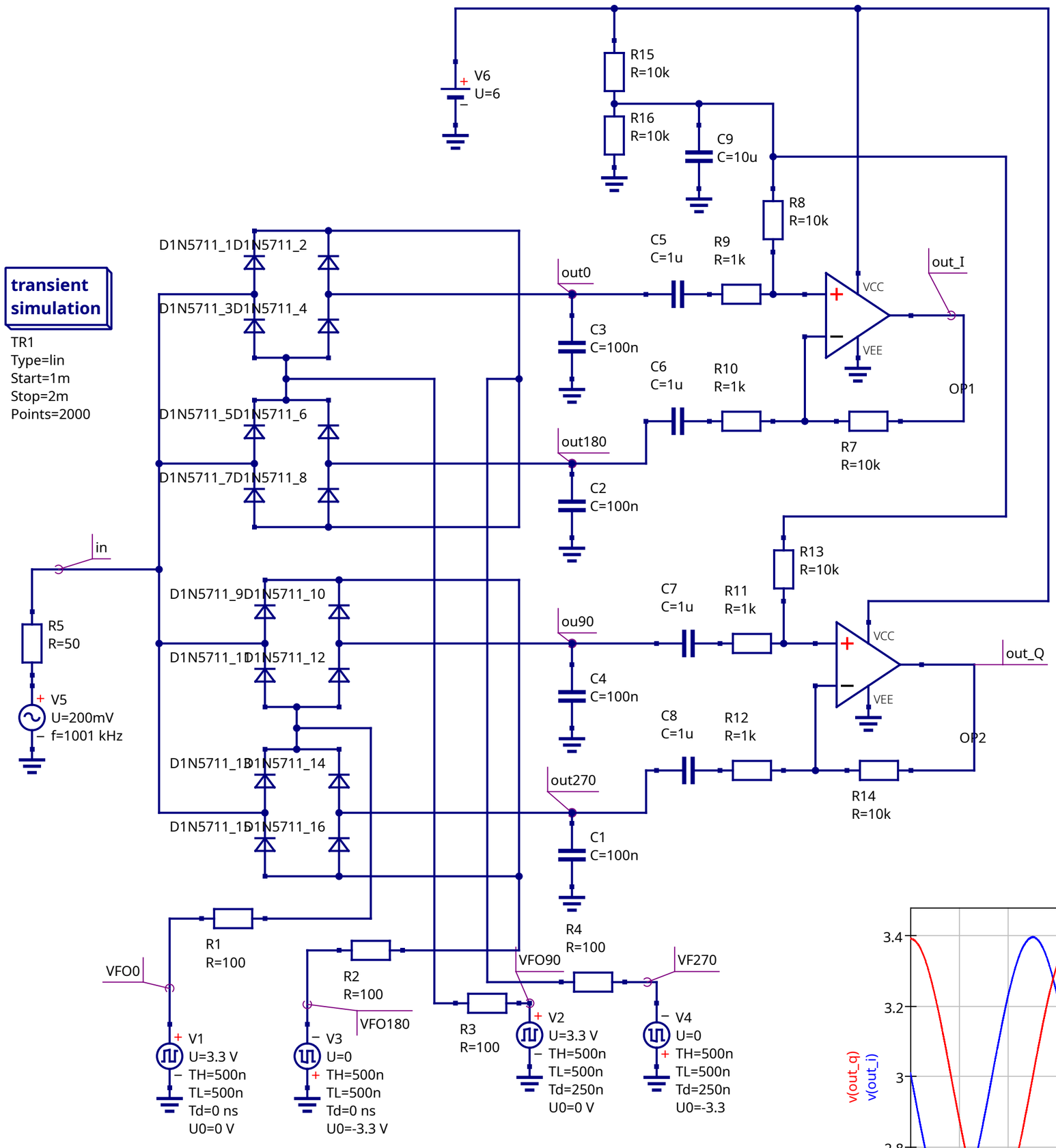
transient simulation
TR1
Type=lin
Start=1m
Stop=2m
Points=2000
V6
U=6
R15
R=10k
R16
R=10k
C9
C=10u
R8
R=10k
C5
C=1u
R9
R=1k
out0
C3
C=100n
C6
C=1u
R10
R=1k
out180
C2
C=100n
R7
R=10k
out_I
OP1
VCC
VEE
R13
R=10k
C7
C=1u
R11
R=1k
ou90
C4
C=100n
C8
C=1u
R12
R=1k
out270
C1
C=100n
R14
R=10k
out_Q
OP2
D1N5711_1
D1N5711_2
D1N5711_3
D1N5711_4
D1N5711_5
D1N5711_6
D1N5711_7
D1N5711_8
D1N5711_9
D1N5711_10
D1N5711_11
D1N5711_12
D1N5711_13
D1N5711_14
D1N5711_15
D1N5711_16
in
R5
R=50
V5
U=200mV
f=1001 kHz
R1
R=100
R2
R=100
R3
R=100
R4
R=100
VFO0
VFO180
VFO90
VF270
V1
U=3.3 V
TH=500n
TL=500n
Td=0 ns
U0=0 V
V3
U=0
TH=500n
TL=500n
Td=0 ns
U0=-3.3 V
V2
U=3.3 V
TH=500n
TL=500n
Td=250n
U0=0 V
V4
U=0
TH=500n
TL=500n
Td=250n
U0=-3.3

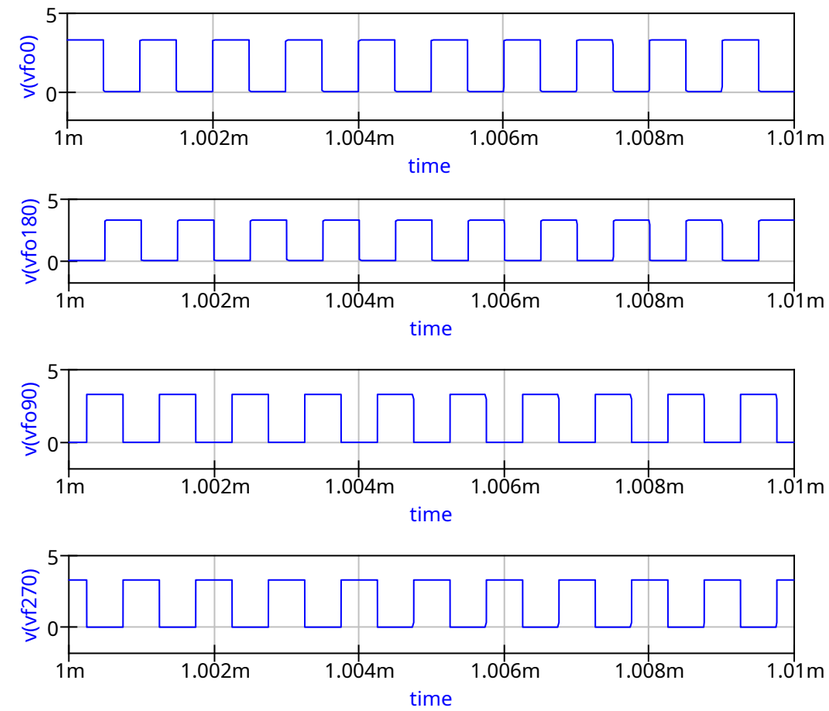
v(vfo0)
v(vfo180)
v(vfo90)
v(vf270)
5
0
1m
1.002m
1.004m
1.006m
1.008m
1.01m
time

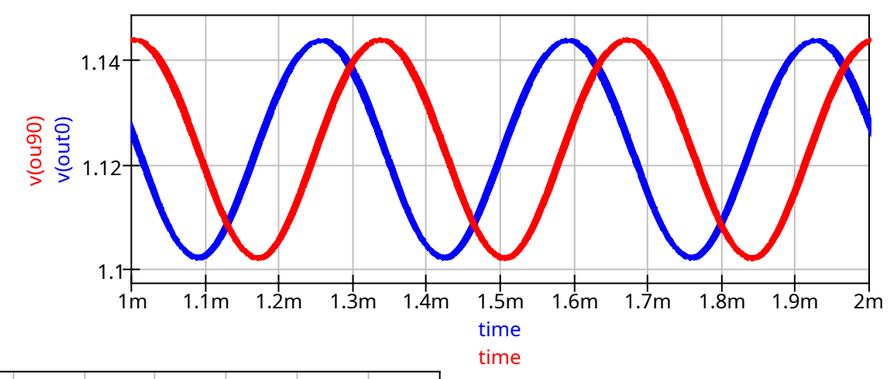
v(ou90)
v(out0)
1.14
1.12
1.1
1m
1.1m
1.2m
1.3m
1.4m
1.5m
1.6m
1.7m
1.8m
1.9m
2m
time
time

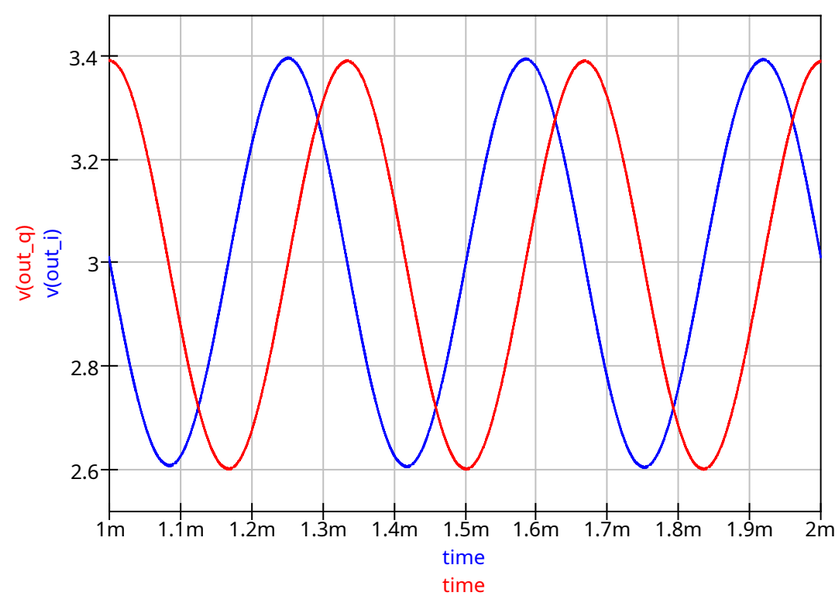
v(out_q)
v(out_i)
3.4
3.2
3
2.8
2.6
1m
1.1m
1.2m
1.3m
1.4m
1.5m
1.6m
1.7m
1.8m
1.9m
2m
time
time